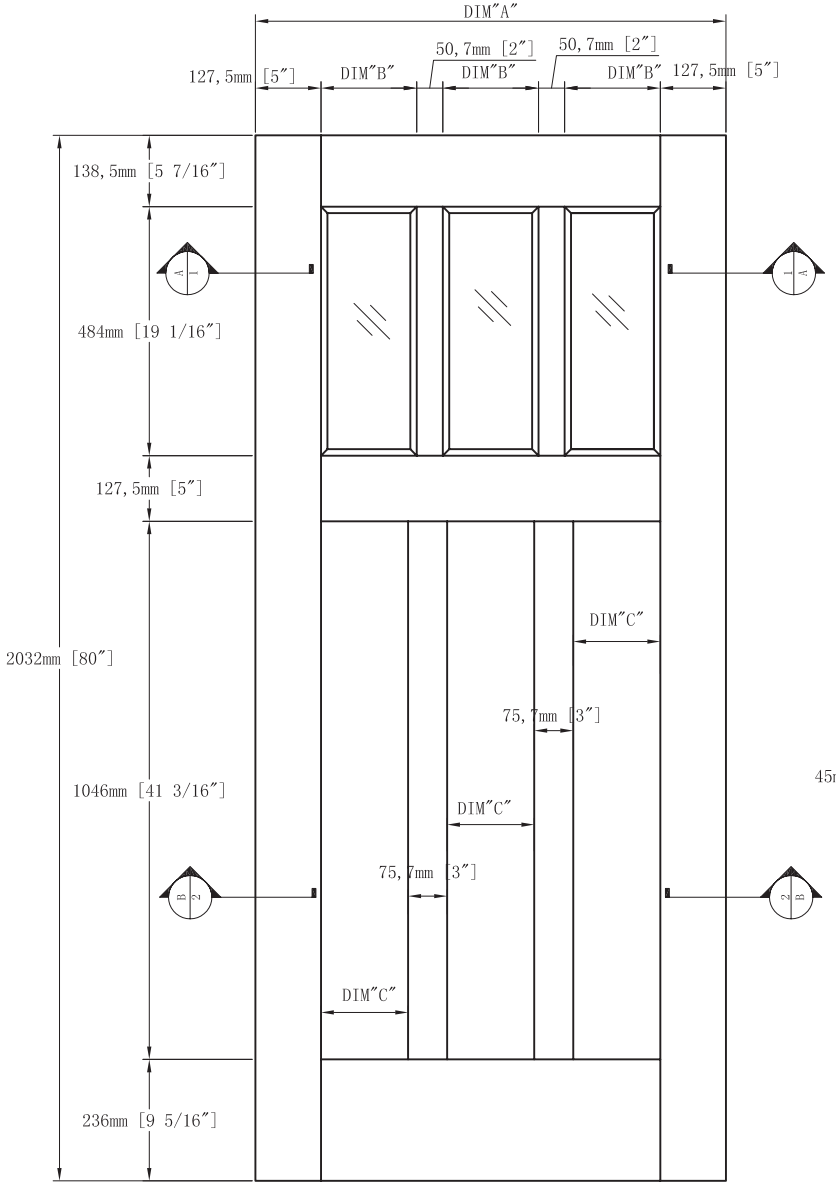

Design No.	DIM"A"	DIM"B"	DIM"C"
1	42″ 1066. 8mm	236. 8mm	220. 1mm
2	36″ 914. 4mm	186mm	169. 3mm
3	30″ 762mm	135. 2mm	118. 5mm

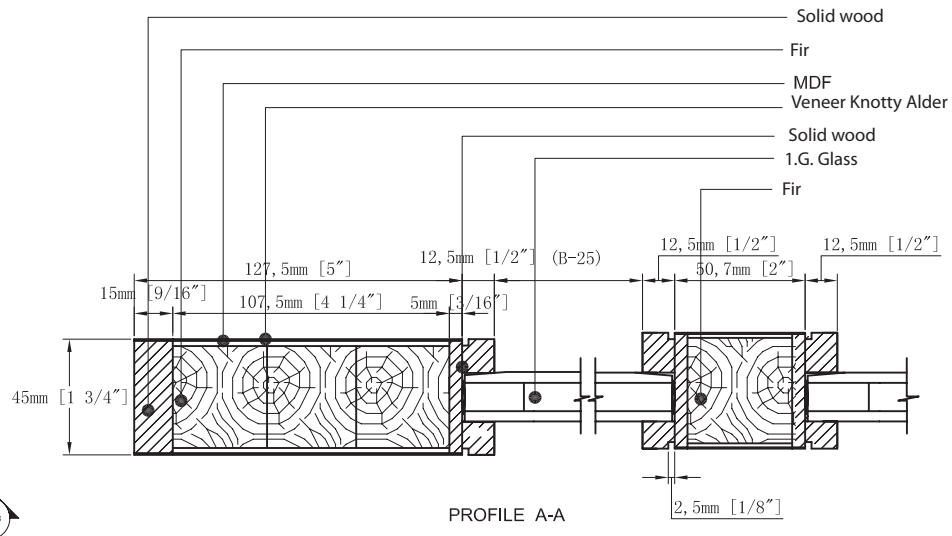

PROFILE A-A

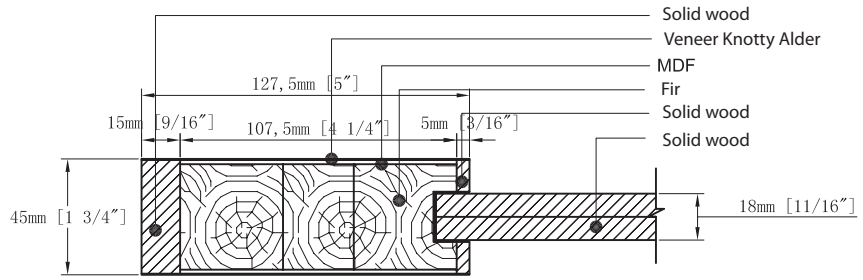

PROFILE B-B

ETO doors