ETO doors

5 FRAME GLASSES

Measures: 80" x 18" x 1 3/4"

Date: 13/01/2011

Design: Luis Fernando

Approval: _____

18" x 80" x 1- 3/4"

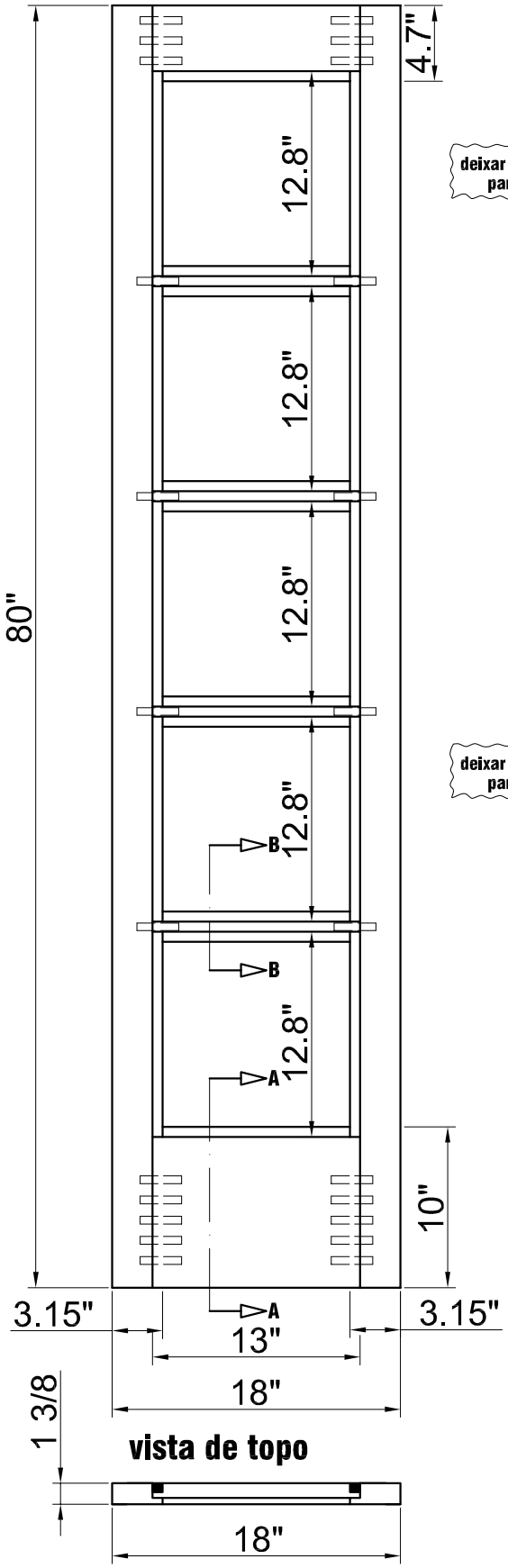

vista de topo

SECTION B-B
(UNIT mm)
Bead Profile

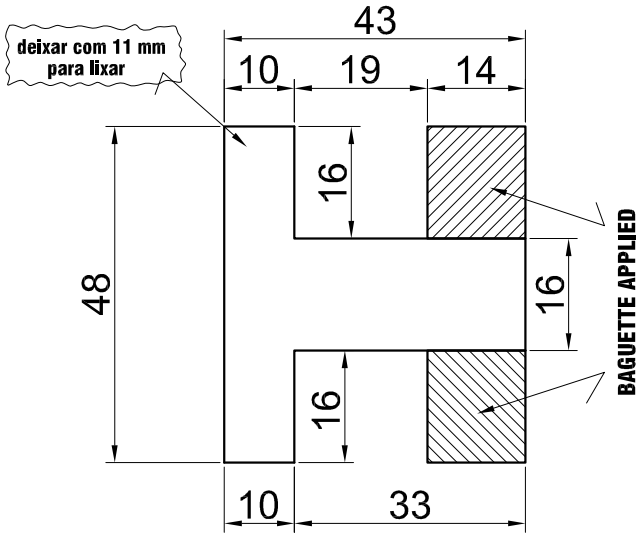

Seção AA

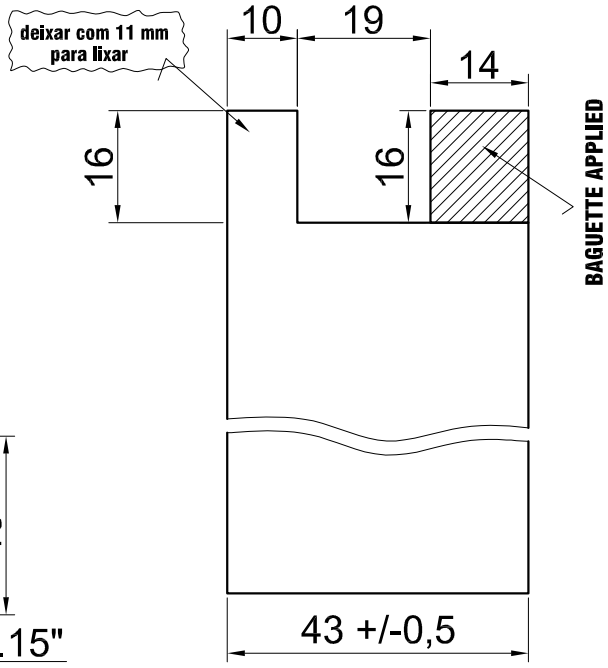

PROFILE OF THE STILE
(UNIT IN mm)
scale 1:1

801 E. 7th St • Los Angeles, CA 90021 • Tel: (866) 609-1798 Fax: (213) 226-4650